To Be Published:

IN THE UNITED STATES DISTRICT COURT
FOR THE NORTHERN DISTRICT OF IOWA
EASTERN DIVISION

ENGINEERED PRODUCTS CO., Plaintiff, vs. DONALDSON COMPANY, INC., Defendant.	No. C 98-2106-MWB **MEMORANDUM OPINION AND ORDER REGARDING EQUITABLE DEFENSES AND POST-TRIAL MOTIONS**

TABLE OF CONTENTS

I. INTRODUCTION 4
- ***A. Factual Background*** 4
- ***B. Trial And Post-Trial Proceedings*** 7

II. LEGAL ANALYSIS 9
- ***A. Donaldson's Equitable Defenses*** 9
  - ***1. Double patenting*** 9
  - ***2. Estoppel and laches*** 11
    - ***a. Estoppel*** 12
      - ***i. Arguments of the parties*** 12
      - ***ii. Applicable standards*** 13
      - ***iii. Analysis*** 14
    - ***b. Laches*** 18
      - ***i. Applicable standards*** 18
      - ***ii. Arguments of the parties*** 20
      - ***iii. Analysis*** 20
- ***B. Donaldson's Post-trial Motions*** 21
  - ***1. Standards for judgment as a matter of law*** 22
  - ***2. Standards for new trial*** 24

3. Issues on which Donaldson seeks either judgment as a matter of law or a new trial 24
a. Erroneous claim construction 24
i. Arguments of the parties 24
ii. Analysis 26
b. Renewed motion for judgment as a matter of law 26
i. Insufficient evidence of infringement 26
ii. Insufficient evidence of "lost profits" and "price erosion." 30
iii. Insufficient evidence of "willfulness." 31
4. Additional grounds on which Donaldson seeks a new trial . . 32
a. Errors in instructions 33
i. "Literal infringement" instruction 33
ii. "Experimental use" instruction 36
iii. "Doctrine of equivalents" instructions 36
b. Verdict form on segregation of lost profits 37
c. Jury's confusion over infringement under the doctrine of equivalents 38
i. Arguments of the parties 38
ii. Underlying circumstances 38
iii. Analysis 40
d. Court's comments to Donaldson's damages expert . . . 43
i. The circumstances 43
ii. Arguments of the parties 45
iii. Analysis 46
e. Use of Federal Judicial Center videotape 47
C. EPC's Post-trial Motions 47
1. Renewed motion for judgment of infringement 48
2. Motion for enhanced damages 49
a. Arguments of the parties 49
b. Applicable standards 50
c. Analysis 51
i. Step one 51
ii. Step two 51
3. Motion for entry of judgment and pre- and post-judgment interest 54
a. Arguments of the parties 54

b. Entry of judgment 55
c. Prejudgment interest 55
d. Post-judgment interest 56

III. CONCLUSION 57

Just as the court was required to resolve a plethora of pre-trial motions in this patent infringement action, it must now resolve a plethora of issues following a jury verdict favorable to the plaintiff, including findings of infringement and "willful" infringement and an award of more than $5.7 million in damages. Still unresolved after the jury's verdict are the defendant's equitable defenses of obviousness-type double patenting, laches, and estoppel, which were tried to the court, and the issue of whether the court should enhance the plaintiff's damages on the basis of the jury's finding of "willfulness." Thus, in post-trial motions, the plaintiff seeks entry of judgment on the jury's verdict; rejection of the defendant's equitable defenses; and trebling of the jury's damage award for "willful" infringement by the defendant. On the other hand, in the defendant's post-trial motions and submissions, the defendant asserts that its equitable defenses require judgment in its favor; that even if its equitable defenses fail, it is nevertheless entitled to judgment as a matter of law notwithstanding the jury's verdict; and that, at the very least, it is entitled to a new trial on several grounds.

The court has already engaged in considerable analysis of most of the legal issues now raised by the parties. *See Engineered Prods. Co. v. Donaldson Co., Inc.*, 165 F. Supp. 2d 836 (N.D. Iowa 2001) (*EPC I*) (decision by former District Judge, now

Circuit Judge, Michael Melloy, following a "*Markman* hearing"); *Engineered Prods. Co. v. Donaldson Co., Inc.*, 225 F. Supp. 2d 1069 (N.D. Iowa 2002) (*EPC II*) (ruling by the undersigned on the defendant's motion for summary judgment on defense of invalidity for obviousness-type double patenting); *Engineered Prods. Co. v. Donaldson Co., Inc.*, 290 F. Supp. 2d 974 (N.D. Iowa 2003) (*EPC III*) (ruling by United States Magistrate Judge Paul A. Zoss on the parties' cross-motions regarding plaintiff's counsel's alleged conflict of interest and appearance of impropriety); *Engineered Prods. Co. v. Donaldson Co., Inc.*, 313 F. Supp. 2d 951 (N.D. Iowa 2004) (*EPC IV*) (ruling on pre-trial motions). Therefore, with the exception of truly "new" issues, the analysis here may be quite abbreviated.

I. INTRODUCTION

A. Factual Background

The court has already described the procedural and factual context to this litigation in some detail in its decisions in *EPC I*, *EPC II*, and *EPC III*. Therefore, the court will not reiterate all of that background information here. Suffice it to say, for present purposes, that this patent infringement action between plaintiff Engineered Products Company (EPC) and defendant Donaldson Company (Donaldson) arises from Donaldson's creation and sale of two air filter restriction indicator devices that EPC contends infringe its U.S. Patent Number 4,445,456 (the '456 patent). EPC's '456 patent, which issued on May 1, 1984, and expired in 2001, is for a mechanical air filter restriction indicator with a lock-up feature. Such a device allows the operator of a vehicle with a combustion engine to see how much restriction is present in the engine's air filter, *i.e.*, how dirty the air filter is, without having to operate the vehicle at the same time. The accused devices are Donaldson's Air Alert, which is also called the "original GMT-800" in this litigation, and

Donaldson's Next Generation Air Alert or NG Air Alert, which is also called the "NG GMT-800" in this litigation.

As confirmed by the evidence presented at trial, the present dispute was prompted in large part by a decision of General Motors (GM) in the mid-1990s to add a progressive air filter restriction indicator to its light truck platform, the GMT-800 platform. This platform includes large passenger vehicles, such as SUVs; hence, it was expected to see enormous growth. EPC and Donaldson, the only domestic manufacturers of progressive air filter restriction indicators, competed for the contract to provide the required indicators. As part of its competition for that contract, Donaldson updated its product to produce the original GMT-800. Based on that updated design, Donaldson was awarded the GMT-800 contract. The original GMT-800 was manufactured and sold from 1997 to 1999, at which time it was replaced by the NG GMT-800. However, on November 20, 1998, EPC filed the present lawsuit alleging that the original GMT-800 infringes EPC's '456 patent. EPC later amended its complaint to assert that the NG GMT-800 also infringes the '456 patent.

Side-by-side illustrations of the preferred embodiment of the '456 patent and the accused devices, in infold and outfold positions, appear below. The illustrations of the preferred embodiment of the '456 patent are drawn from the patent itself. The illustrations of the original GMT-800 are drawn from Plaintiff's Trial Exhibits 320 and 321, with handwritten annotations replaced with numbers. The illustrations of the NG GMT-800 are drawn from the "Krisko" patent, U.S. Patent No. 6,604,486 B1, originally filed August 15, 2000, and issued August 12, 2003, which is assigned to Donaldson. *See* Declaration of Christopher J. Sorensen (Sorensen Declaration) (docket no. 295), Exhibit I. The court has previously found that the Krisko patent is a fair representation of the NG GMT-800, and Donaldson has not subsequently disputed that finding.

THE '456 PATENT	THE ORIGINAL GMT-800	THE NG GMT-800
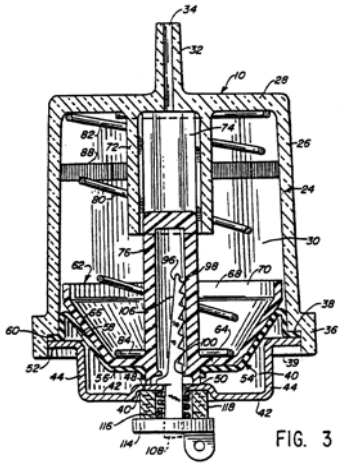 FIG. 3	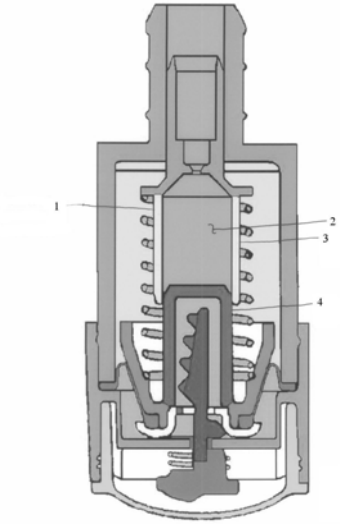	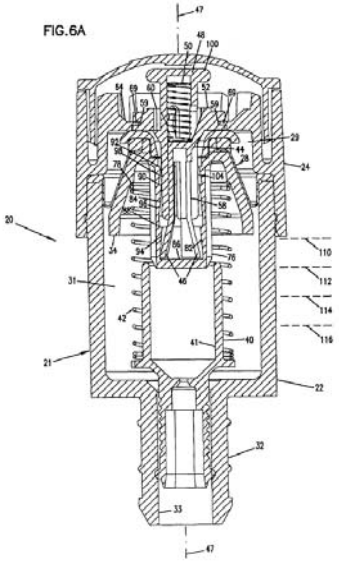 FIG.6A
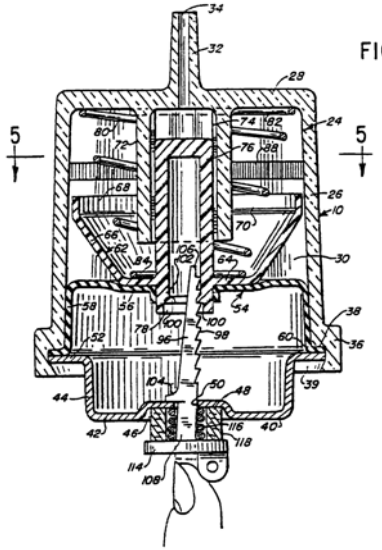 FIG. 4	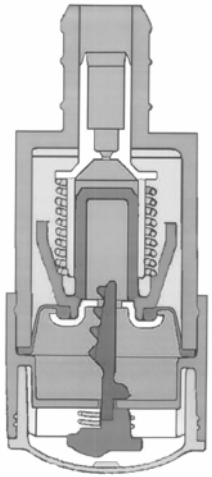	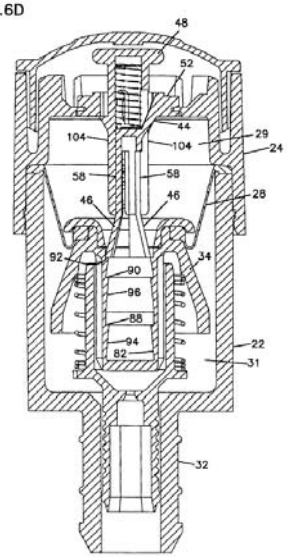 FIG.6D

B. Trial And Post-Trial Proceedings

The trial on issues for jury determination lasted ten days, from April 26, 2004, through May 11, 2004. On May 6, 2004, Donaldson filed written motions for judgment as a matter of law (1) on EPC's claim for "lost profits" damages (docket no. 388); (2) on EPC's claims of infringement by the original GMT-800 and the NG GMT-800 (docket no. 389); and (3) on EPC's claim of "willful" infringement by the original GMT-800 (docket no. 390). The court took those motions under advisement.

On May 12, 2004, the jury rendered a verdict favorable to EPC on all issues before them. Somewhat more specifically, the jury found that the original GMT-800 and the NG GMT-800 each infringe the '456 patent, both "literally" and under the "doctrine of equivalents." The jury also found that the infringement by the original GMT-800 was "willful." Next, the jury rejected Donaldson's defenses of patent invalidity ("on sale" and "in use" bars) and patent misuse. Consequently, for infringement by the original GMT-800, the jury awarded EPC $5,269,270 in damages for lost profits (allocated as $3,826,889 for "lost sales" and $1,442,381 for "price erosion"), with an alternative award of $226,458 as a "reasonable royalty." For infringement by the NG GMT-800, the jury awarded $434,267 as a "reasonable royalty" for sales to Mack and Delphi and $31,194 as a "reasonable royalty" for sales to DAF, but no "lost profits" or "price erosion" damages. *See* Verdict Form (docket no. 398).

After a status conference on May 24, 2004, the parties submitted on May 27, 2004, a stipulated proposed schedule for briefing of remaining issues and filing of post-trial motions (docket no. 403). Pursuant to that stipulation, on May 28, 2004, the court entered an order setting a deadline of June 4, 2004, for all briefs in support of any motion and any request for relief for which a motion was not required; a deadline of June 18, 2004, for resistance briefs; and a deadline of June 25, 2004, for reply briefs (docket no. 404).

On June 4, 2004, EPC filed the following motions: (1) a motion for attorney fees and expenses (docket no. 406); (2) a motion for entry of judgment and award of pre- and post-judgment interest and costs (docket no. 407); (3) a motion for enhanced damages based on the jury's finding of "willfulness" (docket no. 408); (4) a bill of costs (docket no. 409); and (5) a renewed motion for judgment as a matter of law with respect to infringement by the original GMT-800 (docket no. 410). The court will address the motion for attorney fees and expenses and the bill of costs in a separate ruling. On June 4, 2004, Donaldson filed the following briefs and motions: (1) a trial brief for judgment declaring the '456 patent invalid owing to obviousness-type double patenting (docket no. 411); (2) a trial brief for judgment of unenforceability of the '456 patent under the doctrines of laches and estoppel (docket no. 413); (3) a renewed motion for judgment as a matter of law and, alternatively, for new trial, on grounds of erroneous claim construction (docket no. 415); (4) a motion for new trial on twelve separate grounds (docket no. 418); and (5) (on June 7, 2004) a renewed motion for judgment as a matter of law (docket no. 423). Thereafter, on June 25, 2004, Donaldson filed a motion to strike evidence not in the trial record (docket no. 451). Each of the issues presented in these post-trial submissions has now been thoroughly briefed by the parties.

The court's crowded schedule did not permit oral arguments on equitable defenses and post-trial motions until August 5, 2004. At those oral arguments, plaintiff EPC was represented by Edward M. Laine of Oppenheimer, Wolff & Donnelly in Minneapolis, Minnesota. Defendant Donaldson was represented by Annamarie A. Daley of Robins, Kaplan, Miller & Ciresi in Minneapolis, Minnesota. Despite the time limits imposed on the oral arguments by the court, the parties made spirited and informative arguments, not in the least diminished in their effectiveness by the cordial and professional manner in which they were presented. All of the matters before the court are now fully submitted.

II. LEGAL ANALYSIS

A. Donaldson's Equitable Defenses

The court's legal analysis of post-trial issues necessarily begins with the matters actually tried to the court. Those matters are Donaldson's equitable defenses of obviousness-type double patenting, laches, and estoppel.

1. Double patenting

This is the third time in this litigation that the court has addressed Donaldson's obviousness-type double-patenting defense. *See EPC II*, 225 F. Supp. at 1082-1131; *EPC IV*, 313 F. Supp. 2d at 987-993. As this court has previously explained, in essence, "'[t]he judicially-created doctrine of obviousness-type double patenting . . . prohibit[s] a party from obtaining an extension of the right to exclude through claims in a later patent that are not patentably distinct from claims in a commonly owned earlier patent.'" *Id.* at 1092 (quoting *Eli Lilly & Co. v. Barr Labs., Inc.*, 251 F.3d 955, 967 (Fed. Cir. 2001), *cert. denied*, 534 U.S. 1109 (2002)). "[U]nder the circumstances presented here . . ., obviousness-type double patenting is a question of law for the court." *Id.*; *EPC IV*, 313 F. Supp. 2d at 989.

The analysis of obviousness-type double patenting entails two steps: (1) as a matter of law, the court construes the claim in the earlier patent and the claim in the later patent and determines the differences; and (2) the court determines whether the differences in subject matter between the two claims render the claims patentably distinct. *Id.* at 1093 (citing *Eli Lilly*, 251 F.3d at 968). The second step in the analysis may be subject to either a "one-way" test or a "two-way" test. *See id.* at 1100-01. Under the one-way test, the court asks whether the claims of the later-issued patent are obvious over the claims of the earlier-issued patent, but under the two-way test, the court also asks whether the earlier-issued patent claims are obvious over the later-issued patent claims. *Id.* "Prior art" may

be relevant to the analysis at the second step, if it demonstrates that the later patent is only an obvious variation of the earlier patent, *i.e.*, if it "bridges the gap" or "teaches the connection" between the claims of the two patents. *Id.* at 1122-23.

In *EPC IV*, this court summarized as follows its conclusions in *EPC II* on Donaldson's assertion of the obviousness-type double-patenting defense in this case:

> [C]ertain issues relating to the double-patenting defense were determined as a matter of law in *EPC II* and, thus, are the law of the case. Those issues, stated generally, are the following: (1) the construction of the claims of the '456 patent and the '728 patent, including the determination of differences, *see id.* at 1094-1100; (2) the applicability of the one-way test in this case to determine whether the patents are patentably distinct, *see id.* at 1100-1111; and (3) the determination that neither of the "prior art" patents upon which Donaldson had so far relied, identified as the '457 patent and the '733 patent, demonstrates that the '456 patent should be invalidated for obviousness-type double patenting over the '728 patent, because that prior art does not provide any bridge or connection between the claims of the '728 patent and the '456 patent sufficient to demonstrate that the '456 patent is only an obvious variation of the invention claimed in the '728 patent. *See id.* at 1111-1131. Therefore, for Donaldson to prevail at trial on its double-patenting defense, it will have to rely on evidence not already found inadequate under the applicable claim constructions and legal standards.

EPC IV, 313 F. Supp. 2d at 992.

Notwithstanding this court's prior rejection of the sufficiency of the '457 and '733 patents to demonstrate that the '456 patent should be invalidated for obviousness-type double patenting over the '728 patent, Donaldson again relies principally on the '457 and '733 patents in its trial brief on this equitable defense. Donaldson argues that it has not simply reasserted these patents, but has now added new expert opinions that these patents

do make the connection that this court previously found was wanting. Even assuming that the reliance on the '457 and '733 patents is not otherwise improper, the court simply finds far from convincing the belated and largely conclusory opinions of Donaldson's experts about the "connection" that these patents purportedly provide between the claims of the '728 patent and the '456 patent, and thus, far from sufficient to establish an invalidity defense by clear and convincing evidence.

Nor is the court convinced by Donaldson's reliance on the Filter Life gauge as prior art demonstrating the connection. Donaldson attempts to argue around the fact that the Filter Life is admittedly an embodiment of the '457 and '733 patents by contending that the Filter Life gauge somehow teaches the guiding structure that those patents did not. However, the Filter Life gauge has sufficiently different performance requirements, in that it is not itself a "progressive" air filter restriction indicator, that it does not bridge the gap between the earlier and later patents at issue here, both of which are "progressive" air filter restriction indicators. Similarly, the other "prior art" upon which Donaldson relies for this defense is even more distant from "progressive" air filter restriction indicators, so that it also fails to establish the necessary connection.

In short, then, Donaldson's obviousness-type double-patenting defense fails, because none of the prior art upon which Donaldson relies is sufficient to show that the '456 patent is *not* patentably distinct from the '728 patent. The '456 patent is not invalid, as a matter of law, on the ground of obviousness-type double patenting.

2. Estoppel and laches

Much closer questions are presented by Donaldson's assertions that the equitable doctrines of estoppel and laches bar EPC from enforcing the '456 patent. The doctrines of estoppel and laches are closely related—where both doctrines are premised on undue delay by a patentee in enforcing its patent rights with resulting prejudice to a belatedly

accused infringer. Nevertheless, the court, like the parties, will consider these two equitable defenses separately.

a. Estoppel

i. Arguments of the parties. Donaldson contends that it can establish all three elements of its estoppel defense. First, Donaldson argues that EPC was silent and inactive for fifteen years after it knew that Donaldson's Informer potentially infringed the '456 patent, and, indeed, during that time, the parties had a friendly, but competitive relationship. Donaldson contends that these circumstances led it reasonably to infer that EPC did not intend to enforce the '456 patent. Second, Donaldson relied on EPC's long silence to undertake the expense of designing, manufacturing, and marketing the original GMT-800 instead of taking more affirmative steps to determine whether or not the original GMT-800 infringed the '456 patent or to design around that patent before launching an upgraded device. Third, Donaldson asserts that it has suffered economic and evidentiary prejudice, because of EPC's delay. Under the circumstances, Donaldson argues that the court should exercise its discretion to estop EPC from asserting its infringement claims against the original GMT-800 or the NG GMT-800.

EPC argues that the centerpiece of Donaldson's argument is that EPC did not assert the '456 patent against Donaldson's Informer, but EPC had concluded, by 1984, that the Informer was an incomplete copy that was not a serious competitive threat. Circumstances were quite different, EPC contends, when Donaldson copied the '456 patent to produce a product that stole the lucrative GM business from EPC, and did so without attempting any serious analysis of the scope or enforceability of EPC's patent. EPC contends that there was no "threat followed by silence," the classical circumstance giving rise to an estoppel, but knowledge of a non-competitive, if infringing, product followed by prompt enforcement of the patent against a newly-developed and extensively infringing product.

EPC also argues that there is no evidence of any real reliance by Donaldson, because the real impetus for Donaldson to develop the GMT-800 was the opportunity presented by the GM light truck platform, not EPC's inaction in failing to enforce the '456 patent against Donaldson's Informer. Similarly, where there was no real reliance, EPC contends that there was no prejudice arising from that reliance. Under the circumstances, EPC argues that Donaldson is trying to stand equity on its head; therefore, EPC argues that it should not be estopped to assert its infringement claims.

In reply, Donaldson reiterates that the GMT-800 evolved from the Informer, which EPC knew infringed the '456 patent. Thus, Donaldson argues that EPC's prior delays in enforcement of its patent against the Informer must be taken into account in considering whether EPC's patent can be enforced against Donaldson's upgraded products.

ii. Applicable standards. In *EPC I*, Judge Melloy noted that "[e]stoppel is cognizable under 35 U.S.C. § 282 as an equitable defense to patent infringement claims" and that it is, therefore, "committed to the sound discretion of the trial court." *EPC I*, 165 F. Supp. 2d at 844. "Where established, it may bar all relief on a claim." *Id.* at 844-45. Judge Melloy explained, further, that

> [t]here are three essential elements to an equitable estoppel claim:
>
> > 1) The patentee, through misleading conduct, leads the alleged infringer to reasonably infer that the patentee does not intend to enforce its patent against the alleged infringer. "Conduct" may include specific statements, action, inaction, or silence where there was an obligation to speak.
> > 2) The alleged infringer relies on that conduct.
> > 3) Due to its reliance, the alleged infringer will be materially prejudiced if the patentee is allowed to proceed with its claim.

> *Aukerman [v. R.L. Chaides Constr. Co.]*, 960 F.2d [1020,] 1028 [(Fed. Cir. 1992)]; *Gasser Chair Co., Inc. v. Infanti Chair Mfg. Corp.*, 60 F.3d 770, 775 (Fed. Cir. 1995).
>
> Even where the three elements are established, the trial court must, in exercising its discretion and deciding whether to allow the defense to bar the suit, take into consideration any other evidence and facts respecting the equities of the parties. *See Aukerman*, 960 F.2d at 1043. . . . Here, Donaldson bears the burden of establishing every element of its asserted defense by a preponderance of the evidence[.] *[S]ee id.* at 1046.

EPC I, 165 F.3d at 845.

iii. Analysis. If EPC had attempted to assert an infringement claim against Donaldson's Informer at this late date, the court would almost undoubtedly have found that EPC was estopped to assert such a claim. The evidence is clear that EPC knew about the Informer, and even rewrote the '456 patent to "read on" the Informer, but nevertheless did nothing to enforce the '456 patent against the Informer, consequently leading Donaldson to the reasonable belief that EPC would not enforce the '456 patent against the Informer, and that Donaldson relied on that reasonable belief by continuing to make and sell the Informer to its prejudice. *Id.* (elements of estoppel). Thus, the viability of Donaldson's estoppel defense as to the original GMT-800 (and the NG GMT-800) depends, at least to some degree, upon the extent to which the GMT-800 is merely an "upgrade" of the Informer or is instead a newly-developed product. In other words, equity might continue to favor a party who makes only limited "upgrades" to a product that a patentee has thus far failed to accuse of infringement, in the reasonable belief that the patentee does not intend to enforce the patent against that "upgraded" device, but the equities might weigh entirely differently where the accused infringer redesigns its product based on the accuser's patent. *See id.* (even if the three elements of estoppel are established, the trial court must

decide whether to allow the defense to bar the suit, taking into consideration all of the evidence and the facts respecting the equities of the parties).

The court finds that the GMT-800 is not merely an "upgrade" of the Informer, but is instead a newly-developed product. The new product perhaps incorporated features of the Informer, but it incorporated many new features and was extensively redesigned to meet GM's requirements for a progressive air filter restriction indicator with lock-up means for use on the GMT-800 light truck platform. Indeed, Donaldson tries to have the evidence both ways, contending for purposes of estoppel and laches that the GMT-800 is merely an "upgrade" of the Informer, but contending for purposes of infringement that the GMT-800 is a unique design, developed at considerable expense, to replace the Informer and to satisfy GM's requirements. Moreover, the court is convinced from the trial evidence that Donaldson essentially copied the new features of the GMT-800 from the '456 patent. Thus, the court is not convinced that the entire fifteen or more years that EPC purportedly delayed before enforcing its patent against Donaldson can properly be considered delay or "misleading conduct" as to the accused device, from which Donaldson could have reasonably inferred that EPC did not intend to enforce its patent against *any* product produced by Donaldson, where the GMT-800 is not merely an "upgrade" of the Informer.

Turning to the elements of Donaldson's estoppel defense, Judge Melloy explained, that, as to the first element, "[w]here 'a patentee's "misleading conduct" is essentially inaction . . . [that] inaction must be combined with other facts respecting the relationship or contacts between the parties to give rise to the necessary inference that the claim against the defendant is abandoned.'" *EPC I*, 165 F. Supp. 2d at 846 (quoting *Aukerman*, 960 F.2d at 1042). Furthermore, "[i]n the typical estoppel case, the patentee first informs the alleged infringer of its concerns and intention to enforce its patent rights against the

accused device and then fails to follow through on those threats." *Id.* Here, there is no such "threat" followed by "abandonment" of claims of infringement against Donaldson's GMT-800. Rather, EPC followed through on any threats by filing an infringement action within a reasonable time after Donaldson started to market the GMT-800. EPC's purported delay in enforcement of the patent against the GMT-800, the court finds, was not significantly or substantially more than was reasonably necessary to evaluate the properties of the GMT-800. Moreover, the relationship between the parties was that EPC had the dominant share of the market as against Donaldson's Informer, so that there was little necessity for EPC to enforce its patent against an inferior product that incorporated only some of the claims of the '456 patent. Indeed, EPC may have benefitted in its marketing of its own indicators based on the '456 patent from the presence of Donaldson's Informer as a supposedly inferior "foil" in the market. The parties' relationship underwent a very significant change, however, when Donaldson obtained the contract with GM by offering what the court, like the jury, finds is essentially a copied product at a cut-rate price. The court finds that Donaldson could not reasonably have been misled by EPC's conduct as to a significantly different and inferior product into believing that marketing of a newly-developed product drawing *nearly all* of its new features from EPC's patent would not be greeted with accusations of infringement.

Second, the court is persuaded that Donaldson did not rely on EPC's purported inaction in developing and marketing the GMT-800. *See EPC I*, 165 F. Supp. 2d at 845 (reliance is the second element of an estoppel defense). Judge Melloy ruled "that reliance cannot be construed so broadly as to impermissibly conflate the reliance and miselading conduct elements." *Id.* at 849. Rather, "the misleading conduct analysis looks mainly to the conduct of the patentee to determine what reasonable inferences flow from its actions, [but] the reliance factor focuses on the conduct and communications of *both* parties in

determining whether the infringer substantially relied on the patentee's conduct." *Id.* Thus, "it is clearly not enough for Donaldson to show that, given EPC's conduct, it would have been reasonable for Donaldson to be lulled into a sense of security. To demonstrate substantial reliance, as opposed to misleading conduct, Donaldson must do more—it must show that it was, in fact, so lulled." *Id.* Donaldson has not done so. Rather, the evidence clearly indicates that Donaldson simply gave no consideration to whether or not EPC had patent rights in the features incorporated into the original GMT-800 or whether EPC had led Donaldson to believe that EPC would not enforce its patent rights at the time that Donaldson was developing the original GMT-800. There simply was no evidence of any reasonable assessment by Donaldson of whether or not EPC would sue for infringement upon which Donaldson then relied in developing the GMT-800. Rather, the evidence shows that Donaldson's motivation was, quite simply, to win the GM contract at any cost.

In the absence of reliance on EPC's inaction, the court agrees that Donaldson also cannot prove the third element of its estoppel claim, prejudice from that reliance. *See id.* at 845 (prejudice is the third element of an estoppel claim); *see also id.* at 851 ("The final essential element of equitable estoppel requires Donaldson to show material prejudice resulting *from Donaldson's reliance*.") (emphasis added). Thus, the court concludes that Donaldson has failed to establish the essential elements of its estoppel defense.

However, even had the court been convinced that Donaldson had proved these elements of the defense of estoppel, the court finds that equity considerations would not have allowed the defense to bar EPC's suit. *See id.* at 845 ("Even where the three elements are established, the trial court must, in exercising its discretion and deciding whether to allow the defense to bar the suit, take into consideration any other evidence and facts respecting the equities of the parties."). As Judge Melloy noted in *EPC I*, willful infringement and egregious conduct of the accused infringer may preclude a determination

of estoppel. *Id.* at 851-52. As this court observed above, equity might continue to favor a party who makes only limited "upgrades" to a product that a patentee has thus far failed to accuse of infringement, in the reasonable belief that the patentee does not intend to enforce the patent against that "upgraded" device, but the equities might weigh entirely differently where the accused infringer redesigns its product based on the accuser's patent. This case is an actual example of the latter scenario such that Donaldson cannot win a balance of equities in this case. Therefore, even if Donaldson had proved the three essential elements of estoppel to the court's satisfaction, the court, in the exercise of its equitable powers, and upon consideration of the balance of equities between the parties, would not, and does not, let the estoppel defense stand as a bar to EPC's claims of infringement.

b. Laches

i. Applicable standards. In *EPC I*, Judge Melloy also explained the essential principles and requirements for proof of the equitable defense of laches:

> Unlike estoppel which may bar recovery altogether, laches bars recovery only of those damages arising prior to suit. *See Aukerman*, 960 F.2d at 1028; *Gasser Chair Co.*, 60 F.3d at 773. Laches may be defined as "the neglect or delay in bringing suit to remedy an alleged wrong, which taken together with lapse of time and other circumstances, causes prejudice to the adverse party and operates as an equitable bar." *Aukerman*, 960 F.2d at 1028-29. "Courts of equity . . . will not assist one who has slept on his rights, and shows no excuse for his laches in asserting them." *Id.* (quoting *Lane & Bodley Co. v. Locke*, 150 U.S. 193, 201, 14 S. Ct. 78, 37 L.Ed. 1049 (1893)).
>
> To successfully invoke laches, a defendant must prove by a preponderance of the evidence: (1) that the plaintiff delayed filing suit an unreasonable and inexcusable length of time from the time the plaintiff knew or reasonably should

have known of its claim against the defendant; and (2) that the delay resulted in material prejudice or injury to the defendant. *See Advanced Cardiovascular Sys., Inc. v. SciMed Life Sys., Inc.*, 988 F.2d 1157, 1161 (Fed. Cir. 1993); *Aukerman*, 960 F.2d at 1028. . . .

No fixed period of time has been classified as "unreasonable" delay per se; rather, that determination rests on the circumstances of the particular case. *See Aukerman*, 960 F.2d at 1032. However, a rebuttable presumption of laches arises where a patentee delays bringing suit for more than six years after the date the patentee knew or reasonably should have known of the alleged infringer's activity. *See id.* at 1035; *Hall v. Aqua Queen Mfg., Inc.*, 93 F.3d 1548, 1552-53 (Fed. Cir. 1996). This presumption shifts to the patentee the burden of producing evidence which if believed would show that either the patentee's delay was reasonable or excusable under the circumstances or the defendant suffered neither economic nor evidentiary prejudice. *See Wanlass v. General Elec. Co.*, 148 F.3d 1334, 1337 (Fed. Cir. 1998). Without the presumption, "the facts of unreasonable, inexcusable delay and prejudice must be proved and judged on the totality of the evidence presented." *Aukerman*, 960 F.2d at 1038.

The period of delay is calculated from the time the patentee has actual or constructive knowledge of the defendant's potentially infringing activities. *See Wanlass*, 148 F.3d at 1337-38 (quoting *Eastman Kodak Co. v. Goodyear Tire & Rubber Co.*, 114 F.3d 1547, 1559 (Fed. Cir. 1997) ("[D]elay begins when the plaintiff knew, or in the exercise of reasonable diligence should have known, of the defendant's allegedly infringing activity.")). "The availability of delay based on constructive knowledge of the alleged infringer's activities imposes on patentees the duty to police their rights. . . . '[T]he plaintiff is chargeable with such knowledge as he might have obtained upon inquiry, provided the facts already known by him were such as to put upon a man of ordinary intelligence the duty of inquiry.'" *Wanlass*, 148 F.3d

> at 1338 (quoting *Johnston v. Standard Mining Co.*, 148 U.S. 360, 370, 13 S. Ct. 585, 37 L.Ed. 480 (1893), and citing *Advanced Cardiovascular Sys.*, 988 F.2d at 1162 ("Absent actual knowledge, the facts must support a duty of inquiry.")).
>
> Even if a defendant establishes the laches elements, the defense remains an equitable judgment of the trial court in light of all the circumstances. *See Aukerman*, 960 F.2d at 1036; *Gasser Chair Co.*, 60 F.3d at 773. "A court must look at all of the particular facts and circumstances of each case and weigh the equities of the parties. Where there is evidence of other factors which would make it inequitable to recognize the defense despite undue delay and prejudice, the defense may be denied." *Gasser Chair Co.*, 60 F.3d at 773 (quoting *Aukerman*, 960 F.2d at 1036).

EPC I, 165 F. Supp. 2d at 852-54.

ii. Arguments of the parties. Donaldson's arguments concerning laches are necessarily similar to its arguments concerning estoppel. Donaldson again argues that EPC delayed over fifteen years before bringing suit and that such an unreasonable and inexcusable delay caused Donaldson prejudice. EPC likewise echoes its arguments on estoppel, asserting that there was neither "unreasonable" nor "inexcusable" delay, where it delayed in bringing suit against Donaldson's new GMT-800 only long enough to evaluate that device. Similarly, for the same reasons that EPC argued that there was no prejudice to Donaldson giving rise to an estoppel, EPC argues that there is no prejudice to Donaldson justifying application of the doctrine of laches.

iii. Analysis. Again, the court finds that the entire fifteen-year period, while the Informer was on the market, which Donaldson contends EPC delayed before bringing suit, cannot be considered "delay" as to a claim of infringement against a newly-developed product like the GMT-800. Indeed, Donaldson's assertion of laches is less tenable than its assertion of estoppel, because laches plainly requires the court to consider whether the

patentee's purported delay was "unreasonable" and "inexcusable." *See id.* EPC's delay was neither. EPC made a reasonable determination that suing for infringement by a marginally competitive and inferior product like the Informer, which incorporated only some of the patented elements of the '456 patent, simply would not be cost effective. Moreover, for the same reason that Donaldson could not establish the "prejudice" element of its estoppel defense, it also cannot establish the "prejudice" element of laches. *Id.* Finally, just as equity considerations ultimately counseled against allowing the estoppel defense, even if Donaldson had proved the essential elements of that offense, the laches defense "remains an equitable judgment of the trial court in light of all the circumstances." *Id.* at 853. Thus, weighing the equities, the court finds that the evidence in this case makes it inequitable to recognize the defense of laches, even if Donaldson had proved undue delay by EPC and prejudice to Donaldson. *Id.* at 854. Therefore, laches stands as no bar to EPC's infringement claims in this action.

B. Donaldson's Post-trial Motions

Donaldson has also moved for judgment as a matter of law or new trial on several issues or grounds. The Federal Circuit Court of Appeals has explained that, in patent cases, "for questions relating to Rule 50 motions [for judgment as a matter of law] generally, this court has applied regional circuit law," noting that the exception is where the precise issue pertains uniquely to patent law. *Duro-Last, Inc. v. Custom Seal, Inc.*, 321 F.3d 1098, 1106 (Fed. Cir. 2003). Similarly, the Federal Circuit Court of Appeals has explained that, in patent cases, motions for new trial are subject to the law of the regional circuit, "which 'appears to be common to all circuits.'" *Hewlett-Packard Co. v. Mustek Sys., Inc.*, 340 F.3d 1314, 1323 (Fed. Cir. 2003) (quoting *Vulcan Eng'g Co. v. Fata Aluminum, Inc.*, 278 F.3d 1366, 1379 (Fed. Cir. 2002)). Because the parties have

not asserted that unique patent law standards apply to whether to grant or deny any of Donaldson's post-trial motions for judgment as a matter of law or for new trial, the court will apply the law of the Eighth Circuit Court of Appeals to those motions. Nevertheless, whether there were errors in the statement or application of patent law, which might require judgment as a matter of law or a new trial in this case, is a question necessarily controlled by Federal Circuit precedent.

1. Standards for judgment as a matter of law

Rule 50(a) of the Federal Rules of Civil Procedure provides for entry of judgment as a matter of law during trial if "a party has been fully heard on an issue and there is no legally sufficient evidentiary basis for a reasonable jury to find for that party on that issue." FED. R. CIV. P. 50(a). Rule 50(b) provides for renewal of such a motion after trial, as follows:

> If, for any reason, the court does not grant a motion for judgment as a matter of law made at the close of all the evidence, the court is considered to have submitted the action to the jury subject to the court's later deciding the legal questions raised by the motion. The movant may renew its request for judgment as a matter of law by filing a motion no later than 10 days after entry of judgment—and may alternatively request a new trial or join a motion for a new trial under Rule 59. In ruling on a renewed motion, the court may:
>
> (1) if a verdict was returned:
>
> (A) allow the judgment to stand,
>
> (B) order a new trial, or
>
> (C) direct entry of judgment as a matter of law; or
>
> (2) if no verdict was returned;
>
> (A) order a new trial, or
>
> (B) direct entry of judgment as a matter of law.

FED. R. CIV. P. 50(b). Donaldson made motions for judgment as a matter of law in the course of trial, supported by written submissions, on May 6, 2004, then filed its renewed motion for judgment as a matter of law on June 7, 2004 (docket no. 423). Therefore, Donaldson's motions for judgment as a matter of law are controlled by Rule 50(b). Moreover, because a verdict was returned on each of the issues on which Donaldson has moved for judgment as a matter of law, the options before the court are those stated in Rule 50(b)(1).

The Eighth Circuit Court of Appeals recently stated the following standards for a Rule 50 post-verdict motion for judgment as a matter of law:

> "We review de novo the district court's denial of [a] post-verdict motion for judgment as a matter of law." *Racicky v. Farmland Indus., Inc.*, 328 F.3d 389, 393 (8th Cir. 2003). We are required to decide whether or not the record contains evidence sufficient to support the jury's verdict. *Id.* In doing so, "we must examine the sufficiency of the evidence in the light most favorable to [the prevailing party] and view all inferences in [its] favor." *Id.* (citation omitted). "Judgment as a matter of law is appropriate only when all of the evidence points one way and is susceptible of no reasonable inference sustaining [the prevailing party's] position." *Id.* (citation omitted).

Children's Broadcasting Corp. v. Walt Disney Co., 357 F.3d 860, 863 (8th Cir. 2004); *Top of Iowa Co-op v. Schewe*, 324 F.3d 627, 633 (8th Cir. 2003) ("'Post-verdict judgment as a matter of law is appropriate only where the evidence is entirely insufficient to support the verdict.'") (quoting *Belk v. City of Eldon*, 228 F.3d 872, 878 (8th Cir. 2000), *cert. denied*, 532 U.S. 1008 (2001)). On the other hand, the Eighth Circuit Court of Appeals has also explained that "'[a] mere scintilla of evidence is inadequate to support a verdict,' and judgment as a matter of law is proper when the record contains no proof beyond

speculation to support the verdict." *Clark v. Kansas City Missouri Sch. Dist.*, ___ F.3d ___, ___, 2004 WL 1555185, *3 (8th Cir. March 10, 2004) (quoting *Larson v. Miller*, 76 F.3d 1446, 1452 (8th Cir. 1996) (*en banc*)).

2. Standards for new trial

Rule 59 provides that a new trial may be granted "in an action in which there has been a trial by jury, for any of the reasons for which new trials have heretofore been granted in actions at law in the courts of the United States." FED. R. CIV. P. 59(a)(1). The Eighth Circuit Court of Appeals has filled out this rather vague authorization for a new trial by explaining that "'[t]he key question is whether a new trial should [be] granted to avoid a miscarriage of justice.'" *Belk*, 228 F.3d at 878 (quoting *McKnight v. Johnson Controls*, 36 F.3d 1396, 1400 (8th Cir. 1994)). Thus, "[a] new trial is appropriate where the verdict is against the clear weight of the evidence, clearly excessive, or the result of passion or prejudice." *MacGregor v. Mallinckrodt, Inc.*, 373 F.3d 923, 930 (8th Cir. 2004) (citing *Ouachita Nat'l Bank v. Tosco Corp.*, 686 F.2d 1291, 1294 (8th Cir. 1982)). While a ruling on a motion for judgment as a matter of law is reviewed *de novo*, a motion for new trial is reviewed for "clear abuse of discretion." *See Belk*, 228 F.3d at 878. Indeed, "'[w]hen the basis of the motion for a new trial is that the jury's verdict is against the weight of the evidence, the district court's denial of the motion is virtually unassailable on appeal.'" *Children's Broadcasting Corp.*, 357 F.3d at 867 (quoting *Jones v. Swanson*, 341 F.3d 723, 732 (8th Cir. 2003) (internal quotations omitted)).

3. Issues on which Donaldson seeks either judgment as a matter of law or a new trial

a. Erroneous claim construction

i. Arguments of the parties. The first motion to which these standards apply is Donaldson's renewed motion for judgment as a matter of law and, alternatively, for new

trial, on grounds of erroneous claim construction (docket no. 415). Donaldson contends that the constructions of the following limitations were erroneous and prejudicial: (1) "means for selectively disengaging"; (2) "supported by the second end of the housing"; (3) "elongated locking member"; and (4) "interengagable notches." Donaldson contends that *EPC I*, which construed these limitations, and all other orders refusing to modify the constructions first stated in *EPC I* were erroneous and prejudicial to Donaldson, as were the jury instructions and Glossary of Patent Terms, based on the prior rulings, provided to the jury during trial. Donaldson argues that each claim construction was overly broad and that, under proper claim constructions, Donaldson is entitled to judgment of non-infringement as a matter of law. Moreover, Donaldson contends that, under the current claim constructions, the '456 patent is invalid.

EPC argues that the court has already rejected each of these arguments. EPC also argues that, with the exception of the construction of "means for selectively disengaging," Donaldson has never previously moved for reconsideration of these constructions, so that its attempt to do so post-trial is inappropriate. EPC also argues that Donaldson failed to preserve the issue of erroneous claim construction by failing to make a motion for judgment as a matter of law on that ground at trial. Moreover, EPC argues that Donaldson's motion should be denied for lack of prejudice, because different claim constructions would not change the admitted infringement by the original GMT-800, from which most of EPC's damages flow.

In reply, Donaldson asserts that, because claim construction is exclusively a question of law for the court, the court is not powerless to remediate errors of law post-trial. Moreover, Donaldson contends that it preserved the errors "generally" by moving for judgment as a matter of law of non-infringement at the close of evidence.

ii. Analysis. Assuming, without deciding, that Donaldson is entitled to challenge construction of patent claims post-trial, even in the absence of a timely motion for judgment as a matter of law at the conclusion of evidence, the court is not persuaded by Donaldson's arguments. The court—in the person of Judge Melloy, the undersigned, or both—has already heard and rejected each of Donaldson's arguments, some of them more than once. Thus, Donaldson's reassertion of those arguments appear to be primarily an attempt to preserve issues for appellate review. Moreover, Donaldson offers nothing to convince the court that its prior constructions were erroneous. In the absence of erroneous claim constructions, Donaldson's challenges to the jury instructions and Glossary of Patent Terms embodying those constructions, as well as Donaldson's assertions of prejudice, are plainly fruitless. Therefore, Donaldson's renewed motion for judgment as a matter of law and, alternatively, for new trial, on grounds of erroneous claim construction (docket no. 415) will be denied.

b. Renewed motion for judgment as a matter of law

The court turns next to issues raised in Donaldson's June 7, 2004, renewed motion for judgment as a matter of law (docket no. 423). The court finds it appropriate to consider the issues raised in the June 7, 2004, motion in the following order, even though Donaldson treated the issues in a different order: insufficiency of the evidence of infringement; insufficiency of the evidence of damages; and insufficiency of the evidence of "willfulness." On each of these issues, Donaldson also seeks a new trial. *See* Donaldson's Motion For New Trial (docket no. 418).

i. Insufficient evidence of infringement. Donaldson contends that there was no adequate proof that either the original GMT-800 or the NG GMT-800 infringed the '456 patent, either "literally" or under the "doctrine of equivalents," even as the court has erroneously construed Claims 1, 2, and 3 of the patent. Ultimately, Donaldson's

arguments concerning infringement come down to Donaldson's disagreement with EPC's experts and disbelief of EPC's evidence or inferences that EPC seeks to draw from certain evidence. Viewing the evidence through this lens, Donaldson then argues that there is "no legally sufficient evidentiary basis for a reasonable jury to find for [EPC] on [infringement] issue[s]," justifying judgment as a matter of law, *see* FED. R. CIV. P. 50(a) (standards for judgment as a matter of law) & (b) (renewal of motion for judgment as a matter of law); *Children's Broadcasting Corp.*, 357 F.3d at 863 (clarifying these standards), or that, in the alternative, the jury's verdict is "against the clear weight of the evidence," such that a new trial is appropriate. *See MacGregor*, 373 F.3d 930 (standards for new trial); *Children's Broadcasting Corp.*, 357 F.3d at 867 (same). In other words, Donaldson's motion reflects its shock that any reasonable jury could have credited EPC's experts and evidence over Donaldson's.

However, on a motion for judgment as a matter of law, the court does not view the evidence through Donaldson's lens. Rather, as explained above, for purposes of a motion for judgment as a matter of law, the court "must examine the sufficiency of the evidence in the light most favorable to [the prevailing party] and view all inferences in [its] favor," and may grant judgment as a matter of law "only when all of the evidence points one way and is susceptible of no reasonable inference sustaining [the prevailing party's] position." *Children's Broadcasting Corp.*, 357 F.3d at 863 (internal quotation marks and citations omitted). Similarly, for purposes of a motion for new trial, the verdict must be "against the clear weight of the evidence," not merely against the evidence as the movant sees it. *MacGregor*, 373 F.3d at 930. The court concludes that Donaldson's view of the evidence is often strained and never persuasive, so that it discounts or ignores both the legal sufficiency and the weight of EPC's evidence of infringement, when that evidence is viewed through the proper lens.

An example of Donaldson's strained and unpersuasive view of the evidence is Donaldson's argument that there is no record evidence to establish "literal" infringement of Claim 2 by either accused device, because the accused devices purportedly do not have a "guiding member 76 (or tubular member) . . . of such a length as *not to be fully withdrawn from within the bore* when the diaphragm is in its infold position as indicated in Figure 3." *See* Glossary of Patent Terms, p. 6 (construction of "means for guiding indicating member") (emphasis added). Donaldson contends that the only evidence of "the plain and ordinary meaning to one of skill in the art," to decide whether this limitation is met, is testimony of Donaldson's expert, Dr. Hall, that "withdrawn means to not touch." Donaldson contends that the tubular guide member of the original GMT-800 and NG GMT-800 is plainly "withdrawn" from the bore, because it *does not touch* the bore, even though the guiding member protrudes into the bore. EPC counters with dictionary definitions to show that "withdrawn" has no such ordinary meaning, but instead means "removed" or "drawn back."[1] Donaldson's expert's definition of "withdrawn" is so

---

[1]In Donaldson's June 25, 2004, motion to strike evidence not in the trial record (docket no. 451), Donaldson contends that EPC cannot rely on dictionary definitions, because they were not part of the trial record. Donaldson is simply wrong. As the Federal Circuit Court of Appeals has explained,

> Dictionaries are always available to the court to aid in the task of determining meanings that would have been attributed by those of skill in the relevant art to any disputed terms used by the inventor in the claims. *See Vitronics Corp. v. Conceptronic, Inc.*, 90 F.3d 1576, 1584 n. 6, 39 USPQ2d 1573, 1578 n. 6 (Fed. Cir. 1996) ("[T]echnical treatises and dictionaries . . . are worthy of special note. Judges are free to consult such resources at any time . . . and may also rely on dictionary definitions when construing claim terms. . . ."); *Cybor Corp. [v. FAS Techs., Inc.]*, 138 F.3d [1448,] 1459, 46

(continued…)

strained as to be almost ridiculous, and Donaldson's further attempts to argue to the jury that none of its devices had a guide member that was "not fully withdrawn," because their guide members did not touch the bore, where there was substantial evidence that the guide members protruded into the bore, only reinforced the ridiculousness of Donaldson's expert's definition. A reasonable jury was not required to accept such absurdities, even if they are the only evidence presented by "one of ordinary skill in the art." Moreover, EPC has identified testimony of its own experts to the effect that Donaldson's devices do have guide members that are not fully withdrawn from the bore. Thus, viewing the evidence "in the light most favorable to [EPC] and view[ing] all inferences in [EPC's]

---

[1](…continued)

> USPQ2d [1169,] 1177 [(Fed. Cir. 1998)] (citing *Vitronics* for the proposition that a court is free to consult dictionaries, encyclopedias, and treatises at any time to help determine the meaning of claim terms); *Vanguard Prods. Corp. v. Parker Hannifin Corp.*, 234 F.3d 1370, 1372, 57 USPQ2d 1087, 1089 (Fed. Cir. 2000) ("A dictionary is not prohibited extrinsic evidence, and is an available resource of claim construction.").
>
> * * *
>
> As resources and references to inform and aid courts and judges in the understanding of technology and terminology, *it is entirely proper for both trial and appellate judges to consult these materials at any stage of a litigation, regardless of whether they have been offered by a party in evidence or not*. Thus, categorizing them as "extrinsic evidence" or even a "special form of extrinsic evidence" is misplaced and does not inform the analysis.

Texas Digital Sys., Inc. v. Telegenix, Inc., 308 F.3d 1193, 1202 (Fed. Cir. 2002) (emphasis added), *cert. denied*, 538 U.S. 1058 (2003). Even if the dictionary definitions of "withdrawn" could not be considered for any other reason, they would still support the court's conclusion that Donaldson's expert's definition of "withdrawn" was so strained that a reasonable jury was simply not required to accept it.

favor," *see Children's Broadcasting Corp.*, 357 F.3d at 863 (internal quotation marks and citations omitted), there was "legally sufficient" evidence from which a jury could have rejected Donaldson's assertions of non-infringement of the "not fully withdrawn" limitation. Such rejection of Donaldson's expert's interpretation also was not so against the weight of the evidence as to warrant a new trial on infringement issues. *MacGregor*, 373 F.3d at 930.

In summary as to all of Donaldson's "non-infringement" arguments, the court concludes from a review of the arguments of the parties and the evidence presented at trial that there was, indeed, a "legally sufficient evidentiary basis for a reasonable jury to find for [EPC] on [infringement] issue[s]," so that judgment as a matter of law is inappropriate. *See* FED. R. CIV. P. 50(a) (standards for judgment as a matter of law) & (b) (renewal of motion for judgment as a matter of law); *Children's Broadcasting Corp.*, 357 F.3d at 863 (clarifying these standards). Likewise, the court concludes that the jury's verdict is not "against the clear weight of the evidence," so that a new trial is inappropriate. *See MacGregor*, 373 F.3d 930 (standards for new trial); *Children's Broadcasting Corp.*, 357 F.3d at 867 (same). Donaldson's motions for judgment as a matter of law on infringement issues and its alternative motion for new trial on those issues will be denied.

ii. Insufficient evidence of "lost profits" and "price erosion." Donaldson contends that it is entitled to judgment as a matter of law, because there was no legally sufficient evidence of "lost profits" or "price erosion" damages for a reasonable jury to have awarded such damages; that it is entitled to a new trial, because the award of lost profits is against the weight of the evidence; and that it was error for the court to instruct on lost profits, also warranting a new trial. Again, the court finds that these contentions are based primarily on Donaldson's disbelief of EPC's evidence and Donaldson's assumption, therefore, that no reasonable jury would have accepted that evidence, either.

The court has no such view of the legal sufficiency or weight of the evidence. Again, after a review of the arguments of the parties and the evidence presented at trial, the court concludes that there was, indeed, a "legally sufficient evidentiary basis for a reasonable jury to find for [EPC] on [damages] issue[s]," so that judgment as a matter of law is inappropriate. *See* FED. R. CIV. P. 50(a) (standards for judgment as a matter of law) & (b) (renewal of motion for judgment as a matter of law); *Children's Broadcasting Corp.*, 357 F.3d at 863 (clarifying these standards). The jury's verdict, likewise, is not "against the clear weight of the evidence," so that a new trial on these damages is inappropriate. *See MacGregor*, 373 F.3d 930 (standards for new trial); *Children's Broadcasting Corp.*, 357 F.3d at 867 (same). Donaldson's motions for judgment as a matter of law on damages issues and its alternative motion for new trial on those issues will be denied.

iii. Insufficient evidence of "willfulness." Donaldson next asserts that it is entitled to judgment as a matter of law on "willfulness" of any infringement by the GMT-800, because there is no legally sufficient evidence from which a reasonable jury could have found "willfulness." Similarly, Donaldson seeks a new trial on the ground that the verdict of "willfulness" was against the weight of the evidence and on the ground that the court erred by instructing on "willfulness."

These arguments are essentially a reprise of arguments considered and rejected by the court in *EPC IV* in denying Donaldson's motion to exclude evidence relating to "willfulness." *See EPC IV*, 313 F. Supp. 2d at 986-87. The court rejected Donaldson's contention that rulings on motions for summary judgment on "willfulness" and other issues necessarily required a conclusion that Donaldson did not act "willfully" as a matter of law. The court noted that "a jury could decide not only all open questions of fact [on 'willfulness'] in EPC's favor, but could also make all credibility determinations, which the

court was not allowed to make in ruling on the summary judgment motions, adversely to Donaldson." *Id.* at 987. The jury apparently did just that at trial.

Donaldson's unhappiness with the result certainly does not mean that there was no "legally sufficient" evidence of "willfulness" or that the jury's finding of "willfulness" was against the weight of the evidence. Instead, after a review of the arguments of the parties and the evidence presented at trial, the court concludes that there was, indeed, a "legally sufficient evidentiary basis for a reasonable jury to find for [EPC] on the ['willfulness'] issue," so that judgment as a matter of law is inappropriate. *See* FED. R. CIV. P. 50(a) (standards for judgment as a matter of law) & (b) (renewal of motion for judgment as a matter of law); *Children's Broadcasting Corp.*, 357 F.3d at 863 (clarifying these standards). The jury's verdict, likewise, is not "against the clear weight of the evidence," so that a new trial is inappropriate. *See MacGregor*, 373 F.3d 930 (standards for new trial); *Children's Broadcasting Corp.*, 357 F.3d at 867 (same). Donaldson's motion for judgment as a matter of law on "willfulness" and its alternative motion for new trial on that issue will be denied.

4. Additional grounds on which Donaldson seeks a new trial

In addition to the grounds for new trial already addressed above, Donaldson has moved for a new trial on the basis of several asserted errors in jury instructions and the verdict form; the jurors' confusion over whether or not they could find both "literal" infringement and "doctrine of equivalents" infringement, or only one or the other; the purportedly prejudicial effect of the court's comments to one of Donaldson's experts; and the use during jury selection of a videotape, provided by the Federal Judicial Center, which was used to give the jurors an introduction to patent law and litigation. *See* Donaldson's Motion For New Trial (docket no. 418). The court will consider these issues in turn.

a. Errors in instructions

Because the standards for determining the correctness of jury instructions generally are not unique to patent law, the court concludes that the applicable standards must be drawn from the law of the regional circuit. *Cf. Duro-Last, Inc.*, 321 F.3d at 1106 ("[F]or questions relating to Rule 50 motions [for judgment as a matter of law] generally, this court has applied regional circuit law," except when the precise issue pertains uniquely to patent law); *Hewlett-Packard Co. v. Mustek Sys., Inc.*, 340 F.3d 1314, 1323 (Fed. Cir. 2003) (motions for new trial are subject to the law of the regional circuit, "which 'appears to be common to all circuits'") (quoting *Vulcan Eng'g Co.*, 278 F.3d at 1379). Thus, the adequacy of jury instructions is measured by the following yardstick: "Jury instructions must fairly and adequately present the jury with the issues of law and fact appropriate to the case." *MacGregor v. Mallinckrodt, Inc.*, 373 F.3d 923, 929-30 (8th Cir. 2004) (citing *Campos v. City of Blue Springs, Missouri*, 289 F.3d 546, 551 (8th Cir. 2002)). However, the correctness of the *content* of instructions relating to patent law issues is necessarily a matter within the jurisdiction of the Federal Circuit Court of Appeals.

i. "Literal infringement" instruction. Donaldson objects to inclusion of language on two issues in Final Jury Instruction No. 4 on "literal" infringement. First, Donaldson objects to the part of the instruction that advised the jury that "an accused device infringes a claim of the patent if it is reasonably capable of satisfying each claim limitation, even though it may also be capable of non-infringing modes of operation." Donaldson acknowledges that the court added the following to this language, after Donaldson's initial objection: "However, if the accused device is only capable of satisfying each claim limitation after being misadjusted or altered from its original design, then it does not infringe." *See* Preliminary and Final Jury Instructions (docket no. 394). Donaldson contends that the evidence at trial did not support the conclusion that the NG

GMT-800 was ever "capable" of an infringing mode of operation, nor does the claim language allow for such "capability." Furthermore, Donaldson argues that the language conflicts with the requirement for "literal" infringement that a claim limitation must exist in the accused device "just as it is described in the claim language."

The court included the "reasonably capable" language at EPC's request, relying on *Hilgraeve Corp. v. Symantec Corp.*, 265 F.3d 1336, 1343 (Fed. Cir. 2001), *cert. denied*, 535 U.S. 906 (2002), which plainly supports the language. *See* Order (docket no. 393) (attachment 2) (court's letter to counsel explaining its rationale for revised Final Jury Instructions). The additional language concerning "misadjustment" was actually based on a proposal by Donaldson in an e-mail to the court received on May 9, 2004. Under this instruction, including the addition requested by Donaldson, each party was allowed to argue whether the accused devices were "reasonably capable" of infringing modes of operation, or were only capable of doing so if misadjusted, or not capable at all. Moreover, contrary to Donaldson's contentions, EPC did present the jury with evidence that the accused devices were "reasonably capable" of infringing modes of operation. Therefore, the court concludes that the instruction was supported by the evidence at trial and "fairly and adequately present[ed] the jury with the issues of law and fact appropriate to the case." *MacGregor*, 373 F.3d at 929-30.

Donaldson also objects to inclusion of language in Final Jury Instruction No. 4 that the jury could consider whether this litigation was disclosed to the Patent and Trademark Office (PTO), in the prosecution of Donaldson's own patent, to assist the jury in determining whether or not the structures in the accused devices are substantially different from the corresponding structures for the means-plus-function limitations in the '456 patent. *See* Final Jury Instruction No. 4. Donaldson argues that this instruction was

prejudicial, because it created a "trial within a trial" on an "inequitable conduct defense" that was not properly before the jury.

This language was included, at EPC's request, to counter Donaldson's "separate patentability" argument, which was that Donaldson's own patent demonstrated substantial differences between its accused devices and the '456 patent. As the court explained to the parties when it provided them with revised instructions, whether the examiner actually considered the patentability of elements of the infringer's patent over the patent in suit is relevant, because such evidence affects the weight to be given to the "separate patentability" evidence as demonstrating that there are substantial differences. *See, e.g., Atlas Powder Co. v. E.I. Du Pont de Nemours*, 750 F.2d 1569, 1580-81 (Fed. Cir. 1984) (explaining inferences to be drawn from separate patentability); *National Presto Indus., Inc. v. West Bend Co.*, 76 F.3d 1185, 1191-92 (Fed. Cir. 1996) (same). More specifically still, the precise language used by the court was warranted by *National Presto Industries*, 76 F.3d at 1193, in which the court found that the fact that the defendant provided the jury with only limited information about the subject matter of its patent went to the weight of the evidence of separate patentability. *See* Order (docket no. 393) (attachment 2) (court's letter to counsel explaining its rationale for revised Final Jury Instructions). Again, this portion of the instruction, in its final form, was a correct statement of the law on an issue injected into the litigation by Donaldson, it was supported by the evidence at trial, and it "fairly and adequately present[ed] the jury with the issues of law and fact appropriate to the case," so that the parties could make appropriate arguments. *MacGregor*, 373 F.3d at 929-30.

Donaldson is not entitled to a new trial on the basis of the alleged errors in the Final Jury Instruction on "infringement."

ii. "Experimental use" instruction. Donaldson also objects to the portion of Final Jury Instruction No. 8 on "experimental use," because, in its view, there was no evidence in the record to support such an instruction, where it was clear that the invention had already been reduced to practice before the purportedly "experimental" uses occurred. This objection, again, appears to be based on Donaldson's disappointment that the jury did not see the evidence Donaldson's way. Contrary to Donaldson's view of the evidence, however, the court finds that there was sufficient evidence to submit the question of "experimental use" to the jury. Moreover, the instruction in its final form incorporated language explaining that "a sale or use is not 'experimental,' if the invention has already been 'reduced to practice,' that is, if the invention is complete and its utility has been established," *see* Final Jury Instruction No. 8, thus incorporating Donaldson's factual contention for unavailability of the "experimental use" exception. As the court explained to the parties in a cover letter accompanying revised instructions, the statement that, after the invention is reduced to practice, further testing will not qualify as experimental use and the definition of "reduction to practice" were drawn from *SmithKline Beecham Corp. v. Apotex Corp.*, 365 F.3d 1306, 1318-19 (Fed. Cir. 2004). Again, this portion of the instruction, in its final form, was a correct statement of the law on an issue injected into the litigation by Donaldson, it was supported by the evidence at trial, and it "fairly and adequately present[ed] the jury with the issues of law and fact appropriate to the case," thereby allowing the parties to argue their views of the evidence. *MacGregor*, 373 F.3d at 929-30.

Donaldson is not entitled to a new trial on the basis of the alleged errors in the Final Jury Instruction on "experimental use."

iii. "Doctrine of equivalents" instructions. Next, Donaldson contends that all instructions on equivalent infringement were improper and prejudicial to Donaldson,

because the court failed to consider the final amendment to the '456 patent application in its pre-trial order denying Donaldson's motion to exclude evidence on equivalents and applied an unduly restrictive view of the extent to which the alleged equivalents were disclosed in the prior art. Donaldson's contention that the court should not instruct on equivalents was considered and rejected in the court's pre-trial ruling on April 13, 2004 (docket no. 345). Contrary to Donaldson's assertions, the court did consider the final amendment to the '456 patent application in that order, because the court noted that the final amendment *was allowed*, so that the language of the patent embodies the final amendment, and the court then compared each of the amendments making changes to the "final" version of the patent. For all of the reasons previously stated by the court, the court reiterates its rejection of Donaldson's argument that there should be no instructions on equivalents. This portion of Donaldson's motion for new trial will also be denied.

b. Verdict form on segregation of lost profits

In addition to its arguments, rejected above, that the court should not have instructed on lost profits and that the jury's verdict on lost profits was against the weight of the evidence, Donaldson argues that the verdict form "did not allow the jury to segregate lost profit damages attributable to each accused indicator." However, Donaldson then argues that the jury's failure to insert any lost profits damages attributable to the NG GMT-800 shows that the jury was confused by the verdict form.

The manifest incorrectness and internal inconsistencies of Donaldson's arguments on this point are sufficient to deny this portion of Donaldson's motion for a new trial. The verdict form plainly allowed the jury to award "segregated" amounts of lost profits damages, if any, for infringement by each accused device. *See* Verdict Form (docket no. 398) ("EPC'S DAMAGES" Section, Step 1 permitted the jury to award "lost profits," if any, for infringement by the original GMT-800, and Step 2 permitted the jury to award

"lost profits," if any, for infringement by the NG GMT-800). The fact that the jury awarded substantial "lost profits" damages for infringement by the original GMT-800, but no such "lost profits" damages for infringement by the NG GMT-800, and also awarded a "reasonable royalty" for infringement by each device, indicates that the jury clearly understood that it could award "lost profits" damages for infringement by each device, *but found none as to the NG GMT-800*. This portion of Donaldson's motion for new trial will also be denied.

c. Jury's confusion over infringement under the doctrine of equivalents

i. Arguments of the parties. Donaldson also argues that it is entitled to a new trial, because the jury was hopelessly confused over portions of the verdict form relating to "doctrine of equivalents" infringement and the court should not have sent the jury back for additional deliberations on infringement under the "doctrine of equivalents" when the jury initially found only "literal" infringement by the accused devices. Donaldson argues that sending the jury back improperly coerced the jury to return a verdict of infringement under the doctrine of equivalents. ECP, however, argues that the court's oral instruction to the jury at the time removed any possible coercive effect and simply allowed the jurors to make a proper determination on issues for their consideration. EPC also argues that Donaldson was not prejudiced, because the jury had already found "literal" infringement and did not change any damages awards or other portions of the verdict in light of the jury's additional finding of infringement under the doctrine of equivalents.

ii. Underlying circumstances. Donaldson is correct that, when the jury first returned a verdict, which the undersigned read in open court, the jury had only found "literal" infringement by the accused devices; that the court then stated a concern, which had actually occurred to the court while the jury was deliberating, that the court had not made "clear enough that [the jury] could find both literal infringement and infringement

under the doctrine of equivalents"; that, over Donaldson's objections, the court sent the jury back to deliberate on infringement under the doctrine of equivalents; and that the jury returned after only a few minutes of further deliberations, this time with a modified verdict form indicating that the jury also found infringement by each accused device under the doctrine of equivalents. However, Donaldson leaves critical information out of its picture of the resubmission issue.

What Donaldson leaves out of the picture is the court's instruction to the jury regarding further deliberations, which EPC has included in its briefing. The court told the jury,

> Where I gave you the choice of literal infringement and doctrine of equivalents, I did not do a good enough job in hindsight now—as you were deliberating I was thinking about it—of letting you know in the instruct[ions] that you could find no infringement, you could find literal infringement, you could find—not find literal infringement, you can find doctrine of equivalents, or you could find both literal infringement and infringement under the doctrine of equivalents. And the only signal we really gave you was where it says which type, then paren, s, types of infringement. What we should have done was said if you find infringement, you could find literal infringement, doctrine of equivalents infringement or both. And we didn't—we weren't very specific. So I'm going to ask you to go back and deliberate, and if you only found literal infringement, that's fine. You can bring it back as is. If you decide that I had misled you under the instructions and you thought that you had to choose one rather than both, then this will give you an opportunity to find infringement under the doctrine of equivalents, but only if that's what you find. I'm not saying you should find that. I'm not saying anything like that.

Day 10, "Real Time" Transcript at p. 177, *l.* 11, to p. 178, *l.* 14.

iii. Analysis. The court is mindful of the potential coercive effect that supplemental instructions and an order to redeliberate could have on a jury, after the jury has already reached a verdict. *See generally Perricone v. Kansas City Southern Rwy. Co.*, 704 F.2d 1376, 1378-79 (5th Cir. 1983) (identifying the coercive potential of a direction to redeliberate). The court is also mindful that the jury's verdict was not internally inconsistent, although it was potentially incomplete.

Nevertheless, the court is not persuaded that this case resembles the cases on which Donaldson principally relies. In each of these cases, there was clearly a significant potential that the court's conduct coerced the jurors to change their verdicts. *See Robles v. Exxon Corp.*, 862 F.2d 1201, 1203-04 (5th Cir.) (the court received a note from the jury foreperson after the jury was discharged, following a verdict holding the plaintiff 51% at fault and awarding no damages, alerting the court to a "misunderstanding"; the court then solicited unsworn testimony from the jurors that they had believed that the court would award damages if they found the plaintiff more than 50% at fault; the court then instructed the jury to continue deliberations the next day; and after such deliberations, the jury reduced the plaintiff's fault from 51% to 49% and assessed damages), *cert. denied*, 490 U.S. 1051 (1989); *Perricone*, 704 F.2d at 1378 (after the jury found the plaintiff 70% at fault and determined damages, the court explained that the plaintiff could not recover if the jury found him more than 50% at fault, and directed the jury to redeliberate; the jury deliberated fifteen minutes before returning a verdict that reduced the plaintiff's fault to 50%); *McCollum v. Stahl*, 579 F.2d 869, 870-71 (4th Cir. 1978) (the jury initially found that one of the defendants did not wrongfully discharge the plaintiff, and awarded no damages, but also found that the plaintiff was maliciously, wantonly, or oppressively discharged and awarded $15,000 in punitive damages; the trial court concluded that the verdict was inconsistent, possibly because the court had failed to instruct the jury that it

should answer no further questions if the first answer was not in favor of the plaintiff; the court resubmitted the case to the jury; and after further deliberations, the jury found the defendant had wrongfully discharged the plaintiff, awarded $3,750 in damages, reiterated its finding that the discharge was maliciously, wantonly, or oppressively done, and awarded a different amount of punitive damages, $3,750; the appellate court concluded that "[t]he inescapable implication of the remand by the trial court was that nothing was amiss in the computation of damages, but that the award demanded justification," so that "the remand . . . was tantamount, in its effect, to a direction to the jury to find liability in order to warrant the award of damages"), *cert. denied*, 440 U.S. 912 (1979); *Texas Instruments, Inc. v. Cypress Semiconductor Corp.*, 1995 WL 811944 (N.D. Tex. 1995) (finding failure by the jury to engage in meaningful deliberation in a patent case, where the questions presented to the jury were complex and required the resolution of a great deal of conflicting testimony, but the jury "accomplished all this in less than an hour," and the court found that the jury's "rush through the verdict form and confusion was also demonstrated by their failure to answer the interrogatories on damages, despite clear instructions in the verdict form, and their resolution of damages question[s] in less than five minutes after being instructed by the Court that they had reached an incomplete verdict"), *aff'd*, 90 F.3d 1558 (Fed. Cir. 1996), *and cert. denied*, 520 U.S. 1228 (1997).

Unlike the cases cited just above, in this case, the court recognized prior to the jury's initial return that the court had not done a good enough job of telling the jury that determinations of "literal" and "doctrine of equivalents" infringement were not mutually exclusive. Indeed, contrary to the court's usual practice with similar issues on which a jury may find one or more alternatives, there was no express statement in either the instructions or the verdict form that the jury could find no infringement, only "literal" infringement, only "doctrine of equivalents" infringement, or both "literal" and "doctrine

of equivalents" infringement. Instead, the jury was left to decipher the perhaps obscure implications of a direction to indicate "which type(s) of infringement do you find?" Verdict Form (docket no. 398) ("INFRINGEMENT" Section, Step 3 for each device). The court wishes now that it had consulted with the parties, out of the hearing of the jury, and had then made a supplemental oral instruction on the possible alternatives, *before* submission of the case to the jury, when its concerns first arose upon reading the Final Jury Instructions and verdict form aloud to the jury. Nevertheless, the court concludes that it was appropriate to attempt to correct the court's and the parties' oversight.[2]

Moreover, unlike some of the cases cited by Donaldson, the court was at great pains to make clear to the jury that there was *an error or omission in the instructions and the verdict form*, not in their verdict, that required resubmission of the case to the jury, and the court was at even greater pains to make clear to the jurors that they were free to change nothing or to modify their verdict upon correction of the court's error. Donaldson's omission of that fact from its recitation of the circumstances of the resubmission is telling. Just as importantly, the modification of the jurors' determination of the types of infringement could not have, and did not have, any effect on the jurors' determination of any other issue in the case. The jurors had already properly awarded damages for "literal" infringement only, and the jurors did not change any damages award on the basis of a finding of an additional type of infringement.

---

[2]No party proposed an instruction expressly stating that the jury could find *both* "literal" and "doctrine of equivalents" infringement, only one type of infringement, or no infringement at all, perhaps because the parties, who were obviously far more familiar with patent law than the jurors, took for granted that all of those possibilities were available.

Donaldson seems to place great reliance on the fact that the jurors took only a few minutes to modify their verdict to include "doctrine of equivalents" infringement as well as "literal" infringement for both accused devices. However, as one of the cases on which Donaldson relies indicates, "the length of deliberations, by itself, is not a sufficient reason to order a new trial." *Texas Instruments*, 1995 WL 811944 at *9. Donaldson seems to suggest, with better reason, that the jurors could not have made *a proper* determination of "doctrine of equivalents" infringement in a few minutes. The court agrees that a proper consideration of "doctrine of equivalents" infringement, in any case and particularly in this one, would require considerable time. However, Donaldson overlooks the likelihood that jurors had *already* carefully considered "doctrine of equivalents" infringement, as well as "literal" infringement, but mistakenly believed that they could only find *one* type of infringement or the other, but not both, where the jurors were presented with considerable evidence on "doctrine of equivalents" infringement and a substantial jury instruction on that issue. The total time that the jury deliberated does not indicate the same kind of rush and sloppiness that the court pointed to in *Texas Instruments*. It is not surprising, in the circumstances of this case, that the jury did not take long to enter a verdict on an alternative finding that the jury had more than likely already carefully considered.

Therefore, the court finds that Donaldson is not entitled to a new trial on the ground that the court asked the jury to redeliberate on the type or types of infringement, after the jury returned a verdict finding only "literal" infringement.

d. Court's comments to Donaldson's damages expert

i. The circumstances. The penultimate ground on which Donaldson seeks a new trial is the court's response to Donaldson's expert's testimony that he was not expressing an opinion under the Uniform Commercial Code as to whether or not a certain

contract was formed, because "that's a legal opinion that the judge would not let me render." In front of the jury, the court chastised the expert for this comment, as follows:

> THE COURT: You know, by the way, you ought to know better; it's totally inappropriate for you to comment on one of my pretrial rulings limiting your testimony. And as a lawyer you sure as heck ought to know about that.
>
> THE WITNESS: I'm sorry about that. I wasn't aware of your pretrial decisions. My client didn't inform me of that.
>
> THE COURT: That's a cop out. You ought to know better than that.
>
> THE WITNESS: I apologize, Your Honor.

Trial "Real Time" Transcript, Day 9.

Subsequently, in a sidebar with counsel, the court admitted that it had misunderstood the expert's testimony, because the expert was not referring to a pretrial order, although the court noted that the expert had offered a completely unsolicited opinion about what the court might do in a certain situation, which was equally improper. Also, after consulting with counsel, the court gave the following curative instruction:

> Members of the jury, I wanted to talk to you about something that happened with an exchange with this witness, and I'm just going to read back the original question so that you kind of remember. Mr. Laine asked, you're not expressing an opinion under the Uniform Commercial Code as to whether one was formed or not, talking about a lifetime agreement. Then Mr. Wagner [the expert] answered, I'm not; that's a legal opinion that the judge would not let me render.
>
> Now, when he said that, I got confused. I'd issued a lot of rulings in this case including about two weeks before the trial started a 130-page ruling that involved a gazillion issues.

> Several of the issues related to what experts could testify and not testify to. I thought Mr. Wagner was referring to that ruling. He wasn't. It was my mistake. So when I criticized him or chastised him, I was in error doing that, and I just got it confused. There have been lots of rulings in this case. In my own mind I got it confused with some rulings with regard to some other expert witnesses that I've made in the case.
>
> So I was out of line. He wasn't. And I wanted to apologize for that, and you shouldn't hold that against the witness or Donaldson in any way. It was totally my error. Thank you.

Trial "Real Time" Transcript, Day 9, p. 114, *l.* 17 to p. 115, *l.* 21.

ii. Arguments of the parties. Donaldson argues that the court's criticism of its damages expert "undoubtedly" cast an unfair and irreparable shadow upon that expert and his testimony. The proof of the impact of the court's criticism, Donaldson contends, is that the jury adopted wholesale the damages theories and calculations of EPC's expert, which Donaldson asserts were flatly contradicted by the evidence in the record. Donaldson argues that the jury's verdict shows that the court's curative instruction had little effect. EPC, however, argues that the court never commented on the substance of the expert's testimony or opinions, and instead chastised him for what the court believed was an improper reference to the court's pretrial ruling on motions in limine. Under the circumstances, EPC argues that the court's curative instruction, explaining that the court had misunderstood the expert's comment, and that the jurors should not hold the court's mistaken comment against the expert or Donaldson, was sufficient to avoid any potential prejudice. EPC also argues that the jury's adoption of EPC's expert's damages calculations rather than Donaldson's expert's calculations shows that the jury found that Donaldson's expert's calculations, not EPC's expert's, were contrary to the facts.

iii. Analysis. The court regrets chastising the expert in front of the jury and, with hindsight, recognizes that excusing the jury before chastising the expert for what appeared to be inappropriate comments would have been better, both because there would have been no possible impact on the jury and because there is some likelihood that the court could have cleared up its misunderstanding before it made any criticism of Donaldson's expert. Nevertheless, the court does not believe that a new trial is required, just because the criticism occurred in front of the jury. First, the court's mistaken criticism had nothing whatever to do with the substance of the expert's damages calculations. Second, the court gave an emphatic curative instruction taking responsibility for its error and expressly cautioning the jury not to allow the court's mistaken comments to have any impact on the way that the jury viewed the expert's testimony or, more generally, the party for whom the expert appeared. The court was in a unique position to weigh the effectiveness of the curative instruction on the jurors and is convinced, beyond a reasonable doubt, that the curative instruction on this issue was more than sufficient to ensure that Donaldson suffered absolutely no adverse impact, let alone prejudice, from the court's comments to its expert. Indeed, Donaldson did not make any motion for a mistrial at the time, and when asked during oral arguments on the post-trial motions why it had not done so, Donaldson's counsel conceded that she had "no answer for that now." The lack of a contemporaneous motion for a mistrial seriously undercuts Donaldson's present assertions of irreparable prejudice. Under these circumstances, it seems to the court that Donaldson is trying to make bricks with very little straw. Finally, Donaldson cannot make the court's comments on its expert bear the full weight of the jury's rejection of the expert's testimony, where contrary evidence and expert opinions were offered that were sufficient, in and of themselves, to justify the jury's decision.

Therefore, the court concludes that Donaldson is not entitled to a new trial on the basis of the court's mistaken chastisement of Donaldson's damages expert.

e. Use of Federal Judicial Center videotape

Finally, Donaldson seeks a new trial on the ground that the court should not have used as part of jury selection a videotape prepared by the Federal Judicial Center, which was intended to provide potential jurors with an introduction to patent law. Donaldson contends that, for the reasons stated in its pre-trial motion to exclude the videotape, the use of the videotape was prejudicial and confusing, not least because it failed to mention specific defenses that Donaldson was asserting. Donaldson conceded at oral arguments, however, that use of the Federal Judicial Center videotape would not, standing alone, warrant a new trial in this case. Use of the Federal Judicial Center videotape now stands as the only remaining ground for a new trial. Moreover, for the same reasons that the court rejected Donaldson's arguments concerning use of the videotape in its ruling on pre-trial motions, the court rejects Donaldson's motion for a new trial on the ground that the videotape was shown to the jury. Indeed, while the undersigned has been restrained in his ten years as a federal district court judge about characterizing any party's argument as "frivolous," Donaldson's argument concerning use of the videotape is one of the rare ones for which the undersigned can find no other characterization. Zealous representation at times requires judicious determination of which arguments are worth advancing or preserving, and which are not, or the credibility of even meritorious arguments may be called into question by the assertion of meritless ones.

C. EPC's Post-trial Motions

As mentioned much earlier in this ruling, EPC's post-trial motions now before the court consist of the following: (1) a motion for entry of judgment and award of pre- and

post-judgment interest and costs (docket no. 407); (2) a motion for enhanced damages based on the jury's finding of "willfulness" (docket no. 408); and (3) a renewed motion for judgment as a matter of law with respect to infringement by the original GMT-800 (docket no. 410).[3] The rulings on Donaldson's post-trial submissions and motions necessarily indicate the disposition of at least some, or some parts, of EPC's post-trial motions.

1. Renewed motion for judgment of infringement

In its renewed motion for judgment as a matter of law with respect to infringement by the original GMT-800 (docket no. 410), EPC contends that, in addition to the verdict, EPC is entitled to judgment as a matter of law that the original GMT-800 infringes the '456 patent on the following grounds: (1) in *EPC I*, the court granted summary judgment in EPC's favor on that issue; (2) Donaldson stipulated in the Final Pretrial Order on April 19, 2004, that the original GMT-800 "infringes Claims 2 and 3 of the '456 patent," although Donaldson subsequently attempted to avoid that stipulation; and (3) Donaldson has never properly sought relief from the foregoing orders and stipulation. Donaldson counters that, from the context of the summary judgment hearing, it is clear that Donaldson only intended to concede that the original GMT-800 infringes Claim 1 of the '456 patent. Donaldson also argues that it timely corrected the incorrect stipulation in the Final Pretrial Order and that the issue of infringement of Claims 2 and 3 of the '456 patent was tried by consent of the parties.

The court finds that neither of the parties was as careful as might reasonably have been expected about any overbreadth of the summary judgment ruling regarding the extent

[3]The court will address EPC's motion for attorney fees and expenses (docket no. 406) and its bill of costs (docket no. 409), which are also still pending, in a separate ruling.

of Donaldson's concession of infringement of the '456 patent by the original GMT-800. or the stipulation in the Final Pretrial Order. Nor were the parties as careful as might reasonably have been expected about seeking relief from such orders or seeking recognition of a standing objection to avoid the appearance of trying by consent the issues of infringement of Claims 2 and 3 of the '456 patent by the GMT-800. Nevertheless, the court concludes that EPC's motion is mooted by trial of the issue, the jury's verdict of infringement, and the court's rulings upholding the jury's verdict. This motion will be denied as moot.

2. Motion for enhanced damages

a. Arguments of the parties

EPC also moved post-trial for enhanced damages for infringement by the original GMT-800 based on the jury's finding of "willfulness" (docket no. 408). Not surprisingly, this motion became the focus of the parties' attention at oral arguments. EPC argued extensively, in both its written and oral submissions, that the jury has already found "willfulness" and that the record demonstrates that Donaldson's conduct was sufficiently egregious to warrant enhancement of the jury's damages award. The totality of the circumstances, EPC argues, warrants full trebling of the jury's damages award for infringement by the GMT-800. Donaldson disputes each of EPC's grounds for enhancing the damages. Consequently, Donaldson asserts that there was no basis for the jury's finding of "willfulness" and certainly no basis for the court to enhance EPC's damages for infringement by the GMT-800, where in Donaldson's view, its conduct shows a good faith, reasonable belief that it was not infringing the '456 patent and none of the egregious conduct upon which EPC relies as justifying enhanced damages.

b. Applicable standards

Section 284 of Title 35 provides that, when damages for infringement are found, either by the court or a jury, "the court may increase the damages up to three times the amount found or assessed." 35 U.S.C. § 284. As the Federal Circuit Court of Appeals recently explained in *Transclean Corp. v. Bridgewood Services, Inc.*, 290 F.3d 1364 (Fed. Cir. 2002),

> Enhancement of damages under 35 U.S.C. § 284 involves the fact-finder determining that the infringer engaged in culpable conduct and the court exercising its discretion to determine whether and to what extent to enhance the damages. *Jurgens v. CBK, Ltd.*, 80 F.3d 1566, 1570, 38 USPQ2d 1397, 1399 (Fed. Cir. 1996). The jury's finding of willfulness satisfies the first step, *see id.*, and is also one of the factors the court assesses in performing the second step, *see Read [Corp. v. Portec, Inc.]*, 970 F.2d [816,] 827, 23 USPQ2d [1426,] 1435 [(Fed. Cir. 1992)]. However, there are other factors relevant to the second step. *See id.* (listing as factors: (1) deliberate copying; (2) infringer's investigation and good-faith belief of invalidity or non-infringement; (3) litigation conduct; (4) infringer's size and financial condition; (5) closeness of the case; (6) duration of the misconduct; (7) remedial action by the infringer; (8) infringer's motivation for harm; and (9) concealment). A finding of willful infringement "authorizes but does not mandate an award or increased damages." *Modine Mfg. Co. v. Allen Group, Inc.*, 917 F.2d 538, 543, 16 USPQ2d 1622, 1625 (Fed. Cir. 1990).

Transclean Corp., 290 F.3d at 1377-78; *accord Golight, Inc. v. Wal-Mart Stores, Inc.*, 355 F.3d 1327, 1339 (Fed. Cir. 2004) ("'When it is found that the infringer acted without a reasonable belief that its actions would avoid infringement, the patentee has established willful infringement, which may be accompanied by enhanced damages.'") (quoting *Vulcan Eng'g Co. v. Fata Aluminium, Inc.*, 278 F.3d 1366, 1378 (Fed. Cir. 2002); *Riles*

v. Shell Exploration and Prod. Co., 298 F.3d 1302, 1314 (Fed. Cir. 2002) ("A finding of willfulness does not mandate enhanced damages. Rather, '[t]he paramount determination [for enhanced damages] . . . is the egregiousness of the defendant's conduct based on all the facts and circumstances.'") (internal citation omitted) (quoting *Read Corp. v. Portec, Inc.*, 970 F.2d 816, 826 (Fed. Cir. 1992)). Trebling of damages is only the "upper range of the possible enhancement," not the only alternative to no enhancement of damages. *Id.* at 1378. The award of enhanced damages for patent infringement is a matter in the discretion of the trial court. *See Metabolite Labs., Inc. v. Laboratory Corp. of Am.*, 370 F.3d 1354, 1359-60 (Fed. Cir. 2004) ("This court reviews an award of enhanced damages [for willful infringement] for abuse of discretion.").

c. Analysis

i. Step one. The court notes that the jury found that infringement by the original GMT-800 was "willful," and the court has rejected Donaldson's various challenges to submission of the "willfulness" issue to the jury and the sufficiency of the evidence to support the jury's ultimate finding. Thus, the first step in the analysis of whether or not to enhance damages pursuant to § 284 is satisfied in this case. *See Transclean Corp.*, 290 F.3d at 1377 (a jury finding of willfulness satisfies the first step in the analysis of whether to enhance damages).

ii. Step two. The court also finds, based on its review of the evidence and the parties' arguments, that enhancement of EPC's damages is warranted by Donaldson's conduct. *See id.* at 1378 (identifying factors, addressed by the parties here, that are pertinent to the court's determination of whether to enhance damages). Indeed, most of the "*Read* factors" for determining whether the defendant's conduct was sufficiently egregious to warrant enhancement of damages weigh in favor of enhancing EPC's damages, to the extent that they weigh either way. *Id.*

More specifically, the court has observed, above, that the first such factor, "deliberate copying," is present in this case. While Donaldson argues that there are contrary inferences about supposed copying to be drawn from the record, the court is not persuaded by Donaldson's view of the evidence. Weighing perhaps more heavily against Donaldson is the second factor, the infringer's investigation and good-faith belief of invalidity or non-infringement. Here, the court finds that Donaldson performed, at best, a cursory and inadequate investigation of the scope and validity of the '456 patent, which did not even involve advice of counsel, prior to designing and marketing the original GMT-800.

Which way the next "*Read* factor," Donaldson's litigation conduct, weighs in the balance is a closer question. On this point, while EPC contends that Donaldson took unsupported positions, and the court was at times vexed at Donaldson's attempts to reopen or relitigate issues that were already "law of the case," the court ultimately concludes that Donaldson did not take positions that were so plainly frivolous or plainly intended to delay the proceedings that Donaldson's litigation conduct should weigh in favor of enhancing EPC's damages.

On the other hand, the fourth factor, Donaldson's size and financial condition, does weigh in favor of enhancing EPC's damages, because Donaldson is the larger and more affluent of the litigants, and the evidence shows that enhancing EPC's damages will not work an undue hardship on Donaldson. Moreover, the fifth factor, the "closeness of the case," or in this case, the *lack* of closeness of the case, on "willfulness" weighs strongly in favor of enhancing EPC's damages, because the court has, without hesitation, upheld the jury's verdict of "willfulness."

Donaldson makes much of the last several factors as weighing against enhancement of EPC's damages. Thus, as to the sixth and seventh factors, duration of the misconduct

and remedial action by the infringer, respectively, Donaldson points out that it withdrew the original GMT-800 shortly after EPC filed this lawsuit, and then attempted to "design around" the '456 patent, leading to the marketing of the NG GMT-800. However, the court finds that these factors, even viewed in the light most favorable to Donaldson, do not offset the weight of other "egregiousness" factors weighing in favor of enhancement of EPC's damages. Furthermore, the sufficiency of Donaldson's remedial action is called into question, where the jury found that the NG GMT-800 *also* infringes the '456 patent, and the court has upheld that finding. Similarly, as to the eighth factor, intent to harm the patent holder, while the court concedes that there are inferences that Donaldson did not intend to harm EPC, but merely to obtain the GM contracts, the court ultimately finds that there is evidence that Donaldson's decision-makers were not simply motivated to obtain the GM contracts, but to use Donaldson's size and financial advantages to underbid EPC and to undercut EPC's production costs to try to price EPC out of the market. Thus, this factors weighs at least marginally in favor of enhancing EPC's damages. Under the circumstances, the court finds it unnecessary to decide whether the ninth factor, concealment, weighs against Donaldson, because even if Donaldson did not conceal its infringement, the totality of the evidence pertinent to the "egregiousness" factors weighs in favor of enhancement of EPC's damages.

Next, the court finds that a full trebling of the jury's damages award is appropriate in this case, based on the totality of the evidence. *See id.* at 1378 (trebling of damages is only the "upper range of the possible enhancement," not the only alternative to no enhancement of damages). However, only damages for infringement by the original GMT-800 can properly be trebled, where the prerequisite of "willfulness" only applies to infringement by the GMT-800. *See id.* at 1377 (the jury's finding of "willfulness" satisfies the first requirement for enhanced damages).

Therefore, EPC's motion for enhanced damages will be granted and the jury's damages award *for infringement by the original GMT-800* will be trebled pursuant to 35 U.S.C. § 284.

3. Motion for entry of judgment and pre- and post-judgment interest

a. Arguments of the parties

Next, EPC has moved for entry of judgment and an award of pre- and post-judgment interest (docket no. 407). EPC contends that it is entitled to entry of judgment on the jury's verdict and to pre- and post-judgment interest pursuant to 35 U.S.C. § 284. EPC seeks prejudgment interest in the amount of $1,106,378.00 through May 11, 2004, based on the "treasury constant maturity index" referenced in IOWA CODE § 668.13, and calculations of its damages expert, because this rate represents a conservative rate that does no more, and probably less, than fully compensate EPC. EPC also seeks post-judgment interest calculated daily and compounded annually under 28 U.S.C. § 1961(a) and (b). Donaldson counters that prejudgment interest should be denied or limited, because EPC decided in 1996 not to alert Donaldson to the possibility of an infringement action in order to prevent Donaldson from redesigning its indicator, delayed bringing suit, and caused delays during the litigation. Donaldson contends that the one-year Treasury Constant Maturity Rate is a more than adequate interest rate to impose in this litigation. Donaldson makes no argument concerning post-judgment interest. In reply, EPC argues that there are no circumstances justifying withholding or reducing prejudgment interest in this case. Specifically, EPC argues that it delayed bringing this litigation only long enough to conduct a proper evaluation of Donaldson's GMT-800.

b. Entry of judgment

Rule 58 provides, in pertinent part, that, except in circumstances not present here, "[e]very judgment or amended judgment must be set forth on a separate document," and that, in the circumstances presented here, "the court must promptly approve the form of the judgment." *See* FED. R. CIV. P. 58(a)(2)(B). The disposition of Donaldson's post-trial motions and the court's rejection of Donaldson's equitable defenses tried to the court remove all impediments to the entry of judgment upon the jury's verdict and this court's determination to treble damages pursuant to 35 U.S.C. § 284. Therefore, EPC is entitled to entry of judgment in its favor.

c. Prejudgment interest

The purpose of prejudgment interest is "to ensure that the patent owner is placed in as good a position as he would have been had the infringer entered into a reasonable royalty agreement." *General Motors Corp. v. Devex Corp.*, 461 U.S. 648, 655 (1983); *Electro Scientific Indus., Inc. v. General Scanning, Inc.*, 247 F.3d 1341, 1354 (Fed. Cir. 2001) ("'In exercising [its] discretion . . . the district court must be guided by the purpose of prejudgment interest, which is to ensure that the patent owner is placed in as good a position as he would have been had the infringer entered into a reasonable royalty agreement.'") (quoting *Bio-Rad Labs., Inc. v. Nicolet Inst. Corp.*, 807 F.2d 964, 969 (Fed. Cir. 1986), *cert. denied*, 482 U.S. 915 (1987)). "[T]he discretion of the district court in *denying* prejudgment interest is limited to specific circumstances" justifying withholding such an award. *Crystal Semiconductor Corp. v. TriTech Microelectronics Int'l, Inc.*, 246 F.3d 1336, 1346 (Fed. Cir. 2001) (emphasis added). The justification for withholding prejudgment interest "must have some relationship to the award of prejudgment interest," such as "undue delay in prosecution" of a patent infringement claim. *Id.* at 1361. The prejudgment interest determined by the district court is reviewed

for abuse of discretion. *Electro Scientific Indus., Inc.*, 247 F.3d at 1349 (citing *Bio-Rad Labs., Inc.*, 807 F.2d at 968-69).

The court finds unconvincing Donaldson's contentions that the facts in this case warrant withholding or reducing the amount of prejudgment interest. Specifically, the court finds that EPC did not unduly delay this litigation simply to prevent Donaldson from redesigning its indicator and has not unduly delayed this litigation once it commenced. Moreover, the court finds that the rate and amount of prejudgment interest proposed by EPC are appropriate. Therefore, the court will award prejudgment interest in this case in the amount of $1,106,378.00 through May 11, 2004, plus such additional interest, at the same rate, as has accumulated from May 11, 2004, until the entry of judgment pursuant to this order.

d. Post-judgment interest

Post-judgment interest is similar to prejudgment interest, in that it also "serves to further compensate a winning plaintiff from the time of a judgment until payment is made." *See Transmatic, Inc. v. Gulton Indus., Inc.*, 180 F.3d 1343, 1348 (Fed. Cir. 1999). However, the award of post-judgment interest is subject to the law of the regional circuit. *See id.* at 1347-48. As the Eighth Circuit Court of Appeals has explained,

> A federal statute prescribes the relevant postjudgment interest rate and dictates that "[i]nterest shall be allowed on any money judgment in a civil case recovered in a district court." 28 U.S.C.A. § 1961(a) (1994). We have specifically held that, unless a case is expressly exempt from the scope of this statute, the federal postjudgment interest rate applies to cases adjudicated in federal court, regardless of whether the basis for jurisdiction was federal question or diversity.

Maddox v. American Airlines, Inc., 298 F.3d 694, 699-700 (8th Cir. 2002), *cert. denied*, 537 U.S. 1192 (2003). Therefore, post-judgment interest is recoverable and shall be calculated as provided in 28 U.S.C. § 1961(a) and (b).

III. CONCLUSION

Upon the foregoing, the pending motions, in docket order, are resolved as follows:

1. Donaldson's May 6, 2004, motion for judgment as a matter of law on EPC's claim for "lost profits" damages (docket no. 388) is **denied**.

2. Donaldson's May 6, 2004, motion for judgment as a matter of law on EPC's claims of infringement by the original GMT-800 and the NG GMT-800 (docket no. 389) is **denied**.

3. Donaldson's May 6, 2004, motion for judgment as a matter of law on EPC's claim of "willful" infringement by the original GMT-800 (docket no. 390) is **denied**.

4. EPC's June 4, 2004, motion for entry of judgment and award of pre- and post-judgment interest and costs (docket no. 407) is **granted**. The Clerk of Court shall enter judgment in favor of EPC upon the jury's verdict and this court's determination to treble damages pursuant to 35 U.S.C. § 284.

5. EPC's June 4, 2004, motion for enhanced damages based on the jury's finding of "willfulness" (docket no. 408) is **granted**. Pursuant to 35 U.S.C. § 284, the court finds and orders that the damages awarded by the jury for infringement by the original GMT-800 shall be trebled, resulting in a total damages award for infringement by that device of $15,807,810 in treble damages for lost profits, with an alternative award of $679,374 as treble damages based on a "reasonable royalty."

6. EPC's June 4, 2004, renewed motion for judgment as a matter of law with respect to infringement by the original GMT-800 (docket no. 410) is **denied as moot**.

7. The court finds in favor of EPC and against Donaldson on Donaldson's defense of obviousness-type double patenting, and the judgment requested in Donaldson's post-trial brief on that defense (docket no. 411) is **denied**.

8. The court finds in favor of EPC and against Donaldson on Donaldson's defenses of estoppel and laches and the judgment of unenforceability of the '456 patent under the doctrines of laches and estoppel requested in Donaldson's post-trial brief on those defenses (docket no. 413) is **denied**.

9. Donaldson's June 4, 2004, renewed motion for judgment as a matter of law and, alternatively, for new trial, on grounds of erroneous claim construction (docket no. 415) is **denied in its entirety**.

10. Donaldson's June 4, 2004, motion for new trial (docket no. 418) is **denied** on each of the separate grounds stated therein.

11. Donaldson's June 7, 2004, renewed motion for judgment as a matter of law (docket no. 423) is **denied**.

12. Donaldson's June 25, 2004, motion to strike evidence not in the trial record (docket no. 451) is **denied**.

IT IS SO ORDERED.

DATED this 12th day of August, 2004.

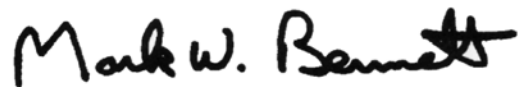

MARK W. BENNETT
CHIEF JUDGE, U. S. DISTRICT COURT
NORTHERN DISTRICT OF IOWA